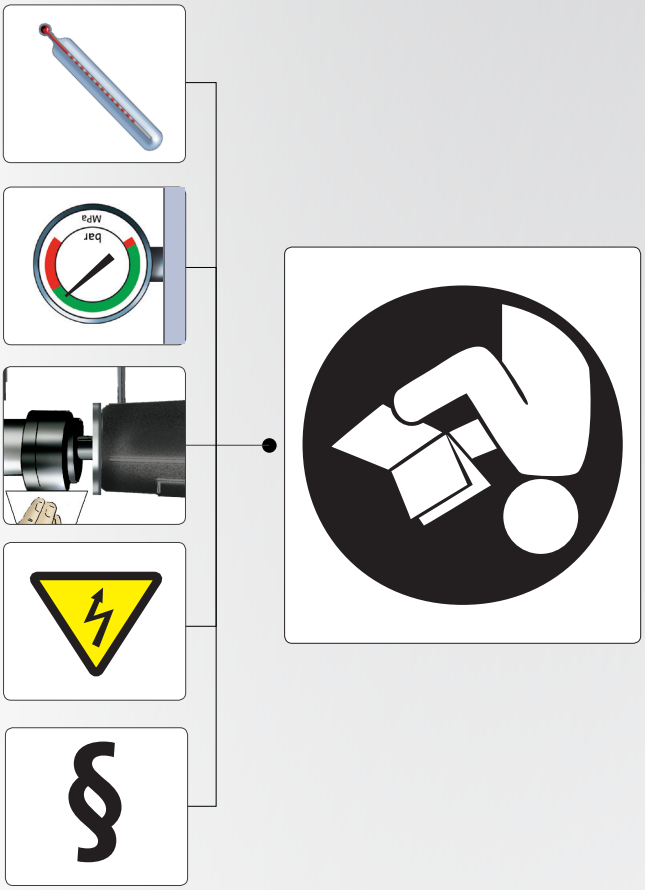

GRUNDFOS Holding A/S
Poul Due Jensens Vej 7
DK-8850 Bjerringbro
Tlf.: +45-87 50 14 00

98879141 0515
ECM: 1157766

be think innovate

GRUNDFOS

The name Grundfos, the Grundfos logo, and the payoff be think innovate are registered trademarks owned by Grundfos Holding A/S or Grundfos A/S, Denmark. All rights reserved worldwide.

GRUNDFOS **INSTRUCTIONS**

NK/NKG
QUICK GUIDE

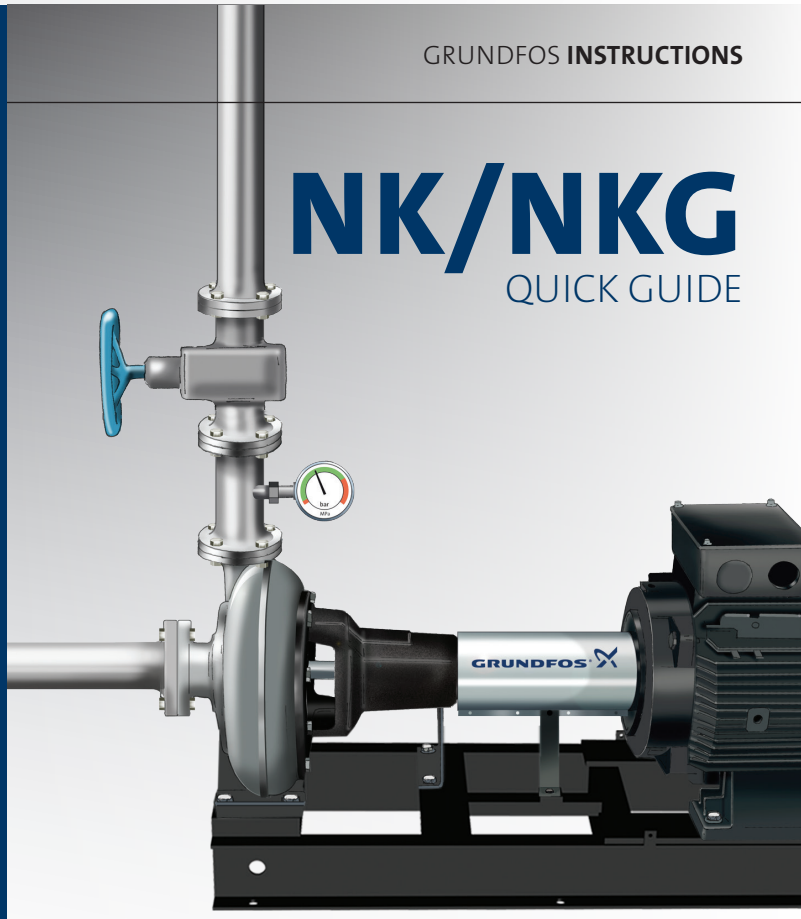

be
think
innovate

GRUNDFOS

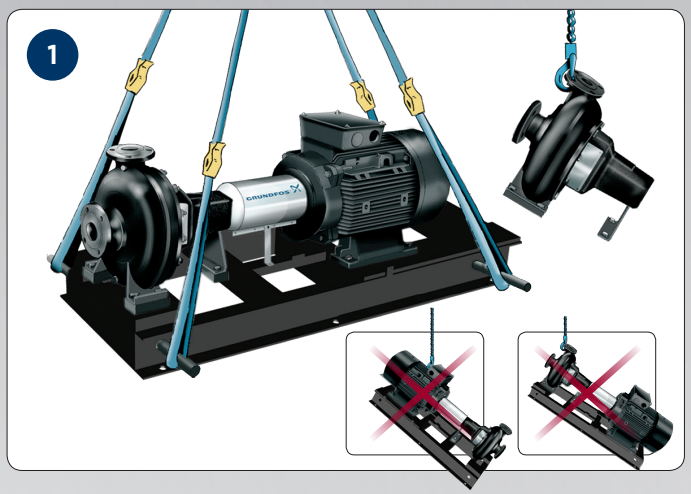
1

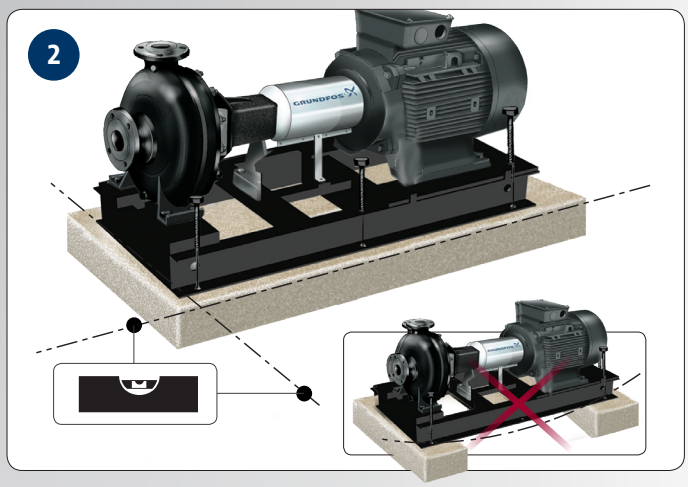
2

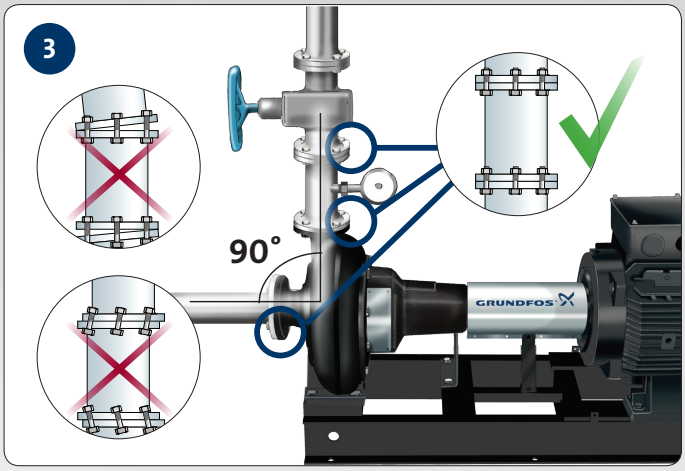
3
90°
GRUNDFOS

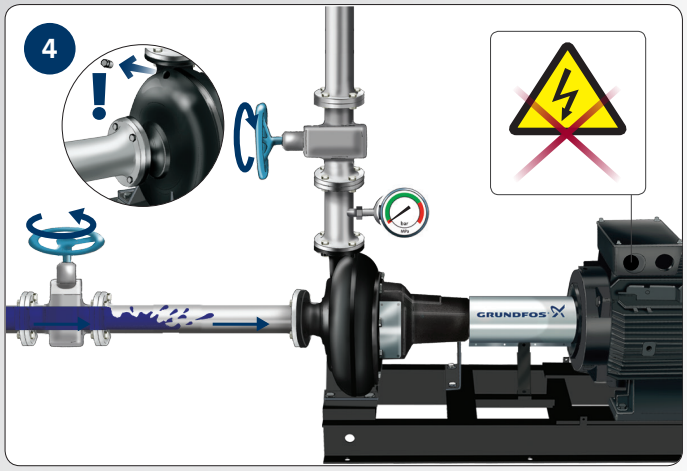
4
GRUNDFOS

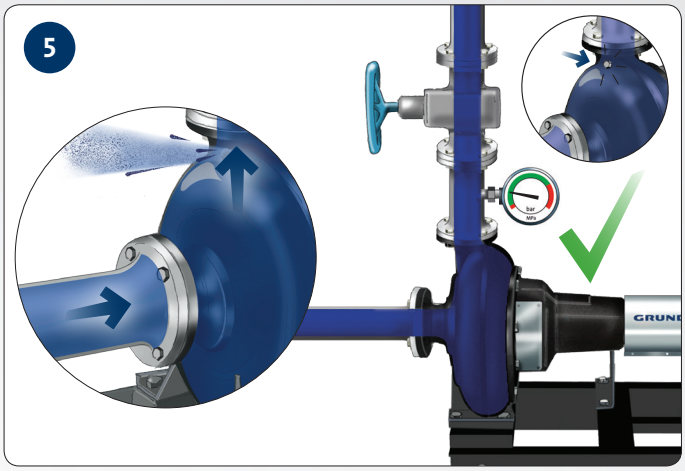
5

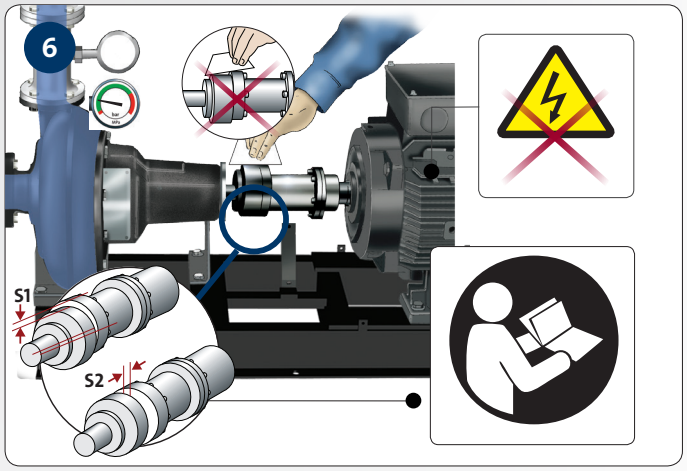
6
S1
S2

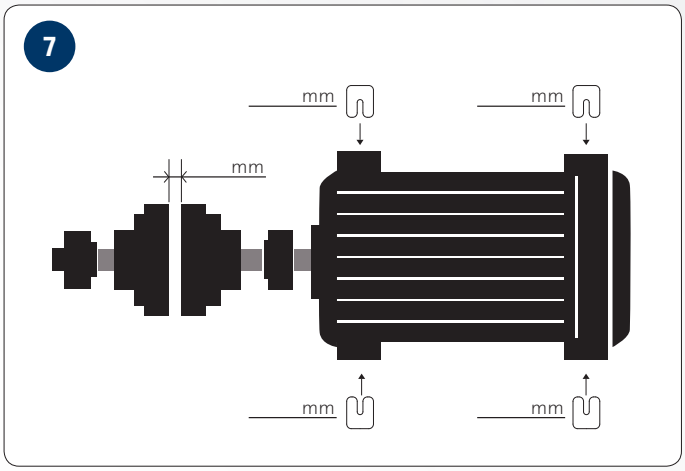
7
mm
mm
mm
mm
mm

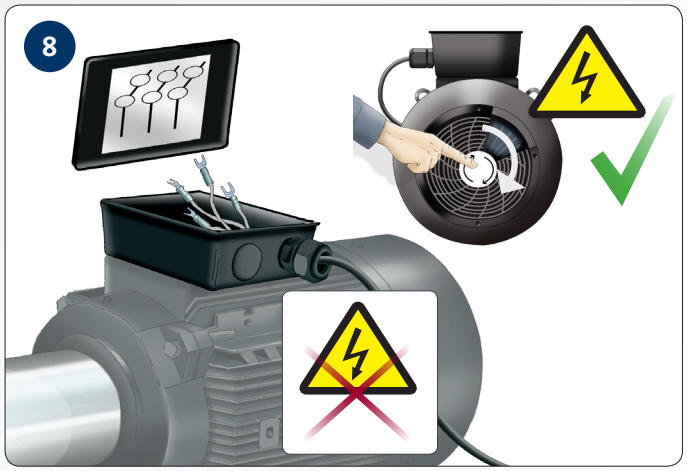
8